VENTOSOL

Product data sheet

Vertical awning
VS6100
VS6200



Product features

- Shaded area
  VS6100: up to 12 m²
  VS6200: up to 25 m²
- Protective box design
  Square or rounded
- Three-piece box for easy servicing
- Front bar elegantly integrated into the box and retracts completely
- Fabric guide: Rail with ZIP system, no chink of light between fabric and two-piece guide rail
- Optional darkening variant

Dimensions

- VS6100: Width min. 66 cm, max. 400 cm
  Projection min. 50 cm, max. 300 cm
- VS6200: Width min. 66 cm, max. 500 cm
  Projection min. 75 cm, max. 500 cm

Installation method

- Installation on the wall
- Installation on the wall with spacer
- In-reveal installation

Wind resistance

- Beaufort 6 (49.5 km/h)
  The wind resistance class may vary depending on the design and dimensions

Drive system / control

- Crank drive
- Motor drive
- Motor with obstacle detection
- Operation optionally via wired switch, radio remote control, smart-home systems (e. g. KNX, TaHoma)
- Optional automatic system with sun, wind and rain sensor

Frame colours

- STOBAG Classic Colours C10 (RAL 9016), C12 (RAL 9010), C28 (RAL 9006), C30 (RAL 9007), C34 (DB703), C48 (RAL 7022), C50 (RAL 7016), C52 (RAL 9005)
- Optional colours: Lifestyle (matt and textured) and Rainbow

Fabric

- Acrylic and Oeko Weave
- Soltis Horizon 86
- Soltis Perform 92
- Soltis Blockout B92
- Soltis Veozip
- Screens 1 %
- Screens 5 %
- Twilight
- Fire

Certificates / Awards

CE
EN 13561

Warranty

- 5 years
  Manufacturer's warranty 2 years, with the option to extend by an additional 3 years

Technical data (dimensions in mm)

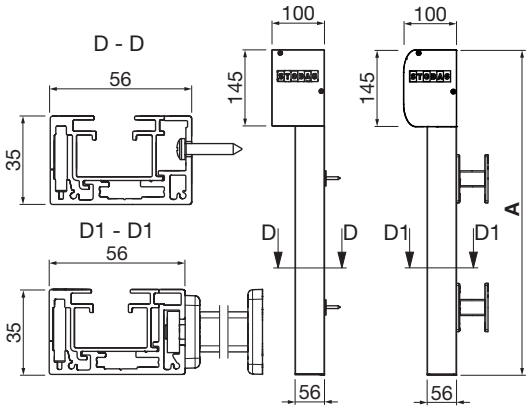

VS6100
Wall installation

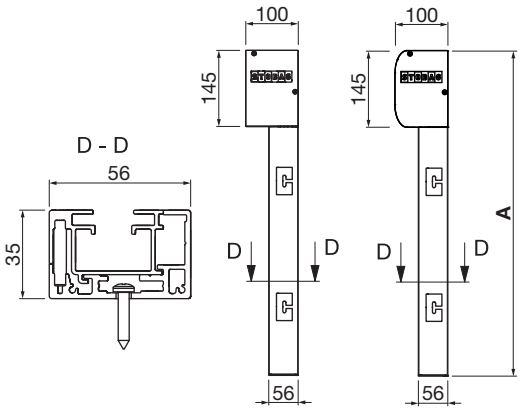

VS6100
Wall installation with motor

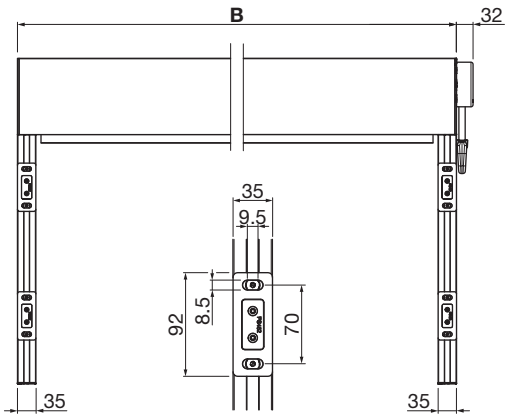

VS6100
Bracket schedule with brackets

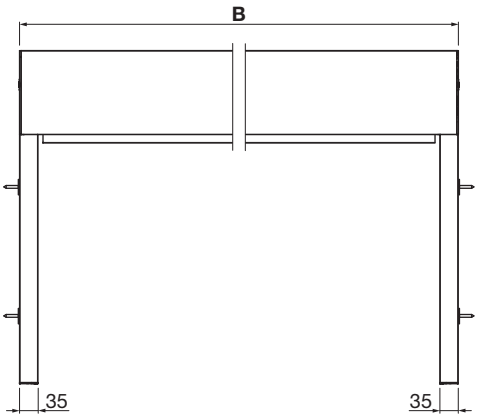

VS6200
Assembly diagram with motor

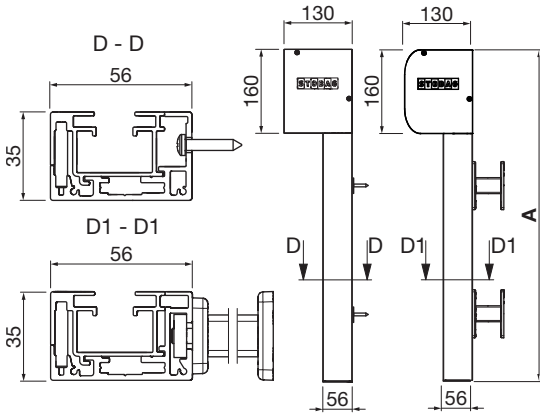

VS6200
Wall installation

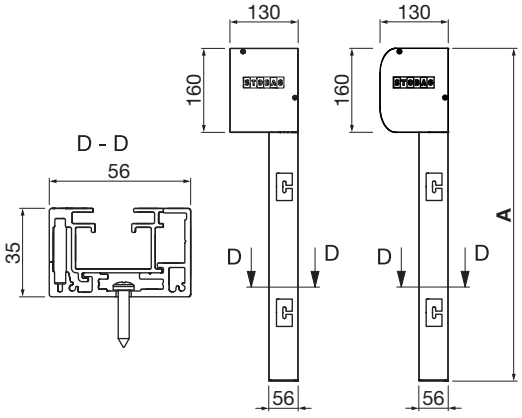

VS6200
Soffit installation with motor

Digital version – 2026-09 – © STOBAG – Subject to change. Depending on the country or region, the technical details, scope of delivery, guarantee conditions, design and availability may differ from the specifications contained in this document.

STOBAG