UNIVERSAL

Product data sheet

Vertical awning
US3510/1, US3510/2, US3510/3
US3910/1, US3910/2, US3910/3



Product features

- Round or square protective box
- Vertical awning for small to large applications
- Can be linked to up to 3 installations

Dimensions

- Width min. 40 cm, max. 450 cm
  Projection min. 40 cm, max. 400 cm

Installation method

- Installation on the wall (all guides)
- In-reveal installation (with guide rail)
- Installation under the ceiling (wire-rope and rod guide)

Wind resistance

- Beaufort 6 (49.5 km/h)
  The wind resistance class may vary depending on the design and dimensions

Drive system / control

- Motor drive
- Operation optionally via wired switch, radio remote control, smart-home systems (e. g. KNX, TaHoma)
- Optional automatic system with sun, wind and rain sensor

Frame colours

- STOBAG Classic Colours C10 (RAL 9016), C12 (RAL 9010), C28 (RAL 9006), C30 (RAL 9007), C34 (DB703), C48 (RAL 7022), C50 (RAL 7016), C52 (RAL 9005)
- Optional colours: Lifestyle (matt and textured) and Rainbow

Fabric

- Acrylic and Oeko Weave
- Soltis Perform 86
- Soltis Perform 92
- Soltis Blockout B92
- Screens 1 %
- Screens 5 %
- Twilight
- Fire

Certificates / Awards

CE
EN 13561

Warranty

- 5 years
  Manufacturer's warranty 2 years, with the option to extend by an additional 3 years

Technical data (dimensions in mm)

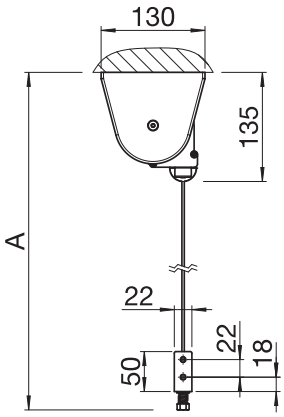

US3510/1
Top installation

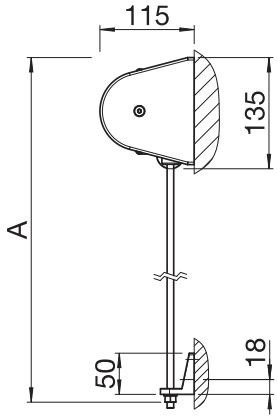

US3510/2
Wall installation

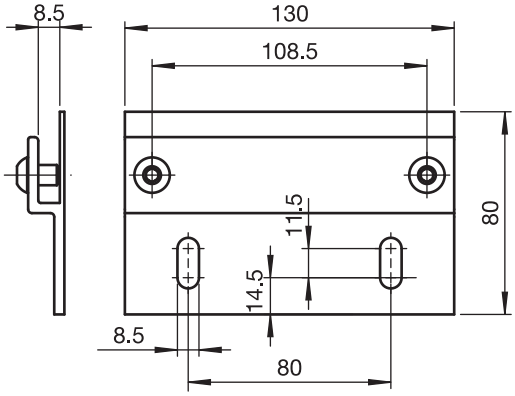

US3510/1
US106
Installation plate

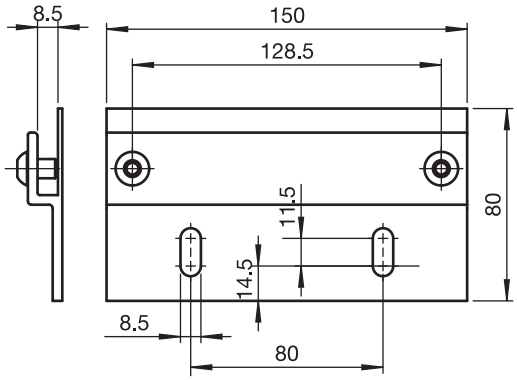

US3910/1
US206
Installation plate

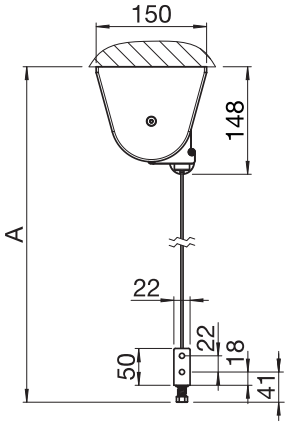

US3910/1
Top installation

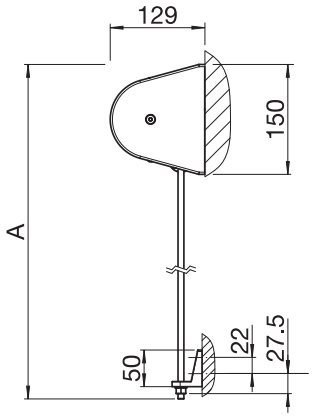

US3910/2
Wall installation

Digital version – 2026-11 – © STOBAG – Subject to change. Depending on the country or region, the technical details, scope of delivery, guarantee conditions, design and availability may differ from the specifications contained in this document.