SIRO

Side shades
SR6000 Flex

Product data sheet



Product features

- Side shading system
- Also usable as a privacy screen or windbreak
- Attachable box system for various applications

Dimensions

- Width min. 80 cm, max. 200 cm
- Projection min. 100 cm, max. 400 cm

Installation method and slope

- Installation on the wall
- Installation under the ceiling

Wind resistance

- Beaufort 6 (49.5 km/h)
  The wind resistance class may vary depending on the design and dimensions

Frame colours

- STOBAG Classic Colours C10 (RAL 9016), C12 (RAL 9010), C28 (RAL 9006), C30 (RAL 9007), C34 (DB703), C48 (RAL 7022), C50 (RAL 7016), C52 (RAL 9005)
- Optional colours: Lifestyle (matt and textured) and Rainbow

Fabric

- Acrylic and Oeko Weave
- Soltis Horizon 86
- Soltis Harmony 88
- Soltis Perform 92
- Screens 1%
- Screens 5%
- Water
- Fire

Certificates / Awards

CE
EN 13561

Warranty

- 5 years
  Manufacturer's warranty 2 years, with the option to extend by an additional 3 years

Technical data (dimensions in mm)

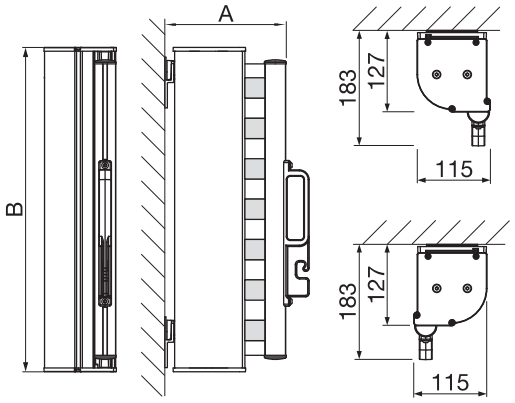

SR6000
Wall / ceiling mounting

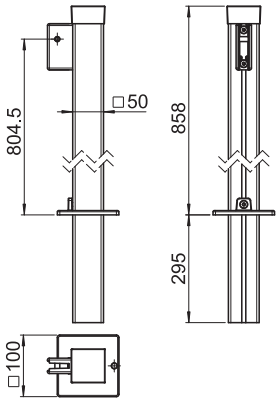

SR6000
SR414/2
Plug-in post

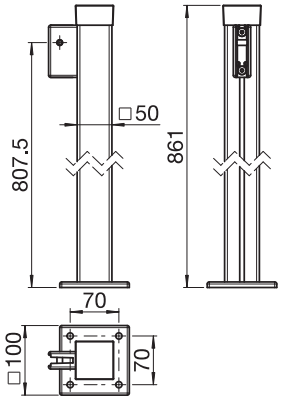

SR6000
SR415/1
Screw-in post

Digital version – 2026-03 – © STOBAG – Subject to change. Depending on the country or region, the technical details, scope of delivery, guarantee conditions, design and availability may differ from the specifications contained in this document.