METRO

Product data sheet

Drop-arm / adjustable drop-arm awning
S3110
FS4200 Box



Product features

- Drop-arm awning: featuring slanted fabric that allows plenty of daylight into the room and preserves the view to the outside
- Drop angle up to 90° or 170° (150° for FS4200)
- No guide rail, giving it a pleasantly light appearance
- Rounded or square protective box

Dimensions

- S3110: Width min. 40 cm, max. 450 cm
  Projection min. 50 cm, max. 175 cm
- FS4200 Box: Width min. 40 cm, max. 450 cm
  Projection min. 50 cm, max. 125 cm

Installation method

- Installation on the wall
- Installation under the ceiling

Wind resistance

- Beaufort 6 (49.5 km/h)
  The wind resistance class may vary depending on the design and dimensions

Drive system / control

- Motor drive
- Operation optionally via wired switch, radio remote control, smart-home systems (e. g. KNX, TaHoma)
- Optional automatic system with sun, wind and rain sensor

Frame colours

- STOBAG Classic Colours C10 (RAL 9016), C12 (RAL 9010), C28 (RAL 9006), C30 (RAL 9007), C34 (DB703), C48 (RAL 7022), C50 (RAL 7016), C52 (RAL 9005)
- Optional colours: Lifestyle (matt and textured) and Rainbow

Fabric

- Acrylic and Oeko Weave
- Soltis Perform 86
- Soltis Perform 92
- Soltis Blockout B92
- Screens 1 %
- Screens 5 %
- Twilight
- Fire

Certificates / Awards

CE
EN 13561

Warranty

- 5 years
  Manufacturer's warranty 2 years, with the option to extend by an additional 3 years

Technical data (dimensions in mm)

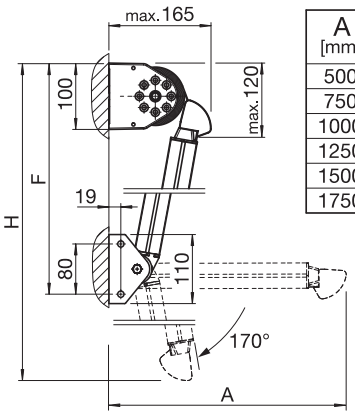

A [mm]	F [mm]	H [mm]
500	552	972
750	802	1468
1000	1052	1964
1250	1302	2460
1500	1552	2957
1750	1802	3453

S3110
Wall installation

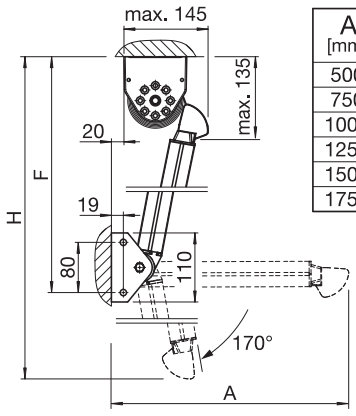

A [mm]	F [mm]	H [mm]
500	573	992
750	823	1488
1000	1073	1984
1250	1323	2480
1500	1573	2977
1750	1823	3473

S3110
Top installation

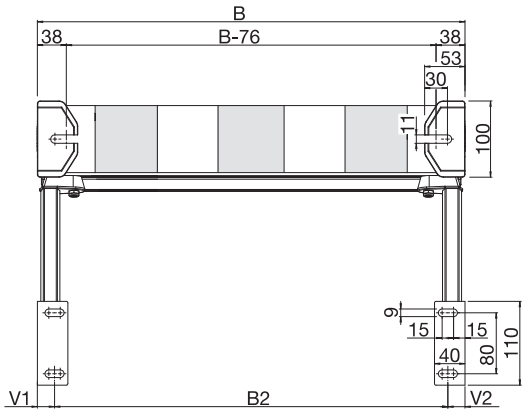

S3110
Mounting plan with gear drive; B = Total width. For operating with gear drive from outside: V1 = min. 73 mm; V1 + V2 = max. 20% of total width.

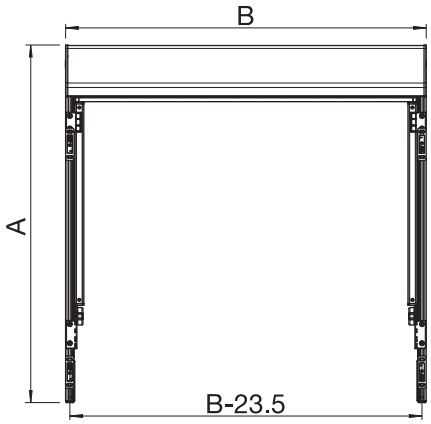

FS4200 Box
Installation plan

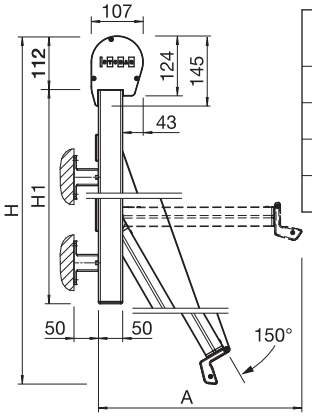

A [mm]	H [mm]	H1 [mm]
500	1075	705
750	1540	955
1000	2005	1205
1250	2475	1455

FS4200 Box
Wall installation with round box

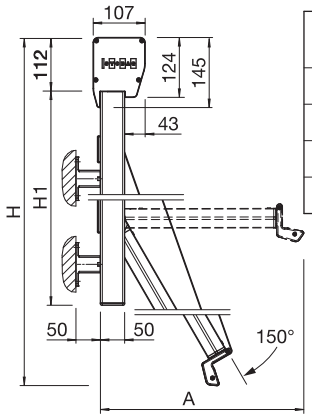

A [mm]	H [mm]	H1 [mm]
500	1075	705
750	1540	955
1000	2005	1205
1250	2475	1455

FS4200 Box
Wall installation with square box

Digital version – 2026-11 – © STOBAG – Subject to change. Depending on the country or region, the technical details, scope of delivery, guarantee conditions, design and availability may differ from the specifications contained in this document.