ASTANO Soft-Top

Folding awning
TR4120

Product data sheet



Product features

- Roof system with folding awning
- Integrated water drainage
- Optional top board
- Optional integrated lighting

Dimensions

- Width min. 200 cm, max. 500 cm
- Projection min. 200 cm, max. 600 cm

Installation method and slope

- Installation on the wall, 0° slope
- Installation under the ceiling, 0° slope

Wind resistance

- Beaufort 7 (61.5 km/h)

Drive system / control

- Motor drive
- Operation optionally via wired switch, radio remote control, smart-home systems (e.g. KNX, TaHoma)
- Optional automatic system with sun, wind and rain sensor

Frame colours

- STOBAG Classic Colours C10 (RAL 9016), C12 (RAL 9010), C28 (RAL 9006), C30 (RAL 9007), C34 (DB703), C48 (RAL 7022), C50 (RAL 7016), C52 (RAL 9005)
- Top board optionally in grey C28 (RAL 9006), white C12 (RAL 9010), black C52 (RAL 9005)
- Optional colours according to the STOBAG LIFESTYLE or RAINBOW colour palette

Fabric

- Folding awning: Resistant, Resistant Blockout, Soltis W96
- The application options depend on the specific product configuration

Lighting

- Optional LED strip lighting on the water channel with dimmer function
- Optionally either strips with colour temperature 3500 K and luminous flux 960 lm or Tunable White with colour temperature 2800 – 3200 K and luminous flux 400 lm

Certificates / Awards

CE
EN 13561

Warranty

- 5 years
  Manufacturer's warranty 2 years, with the option to extend by an additional 3 years

Technical data (dimensions in mm)

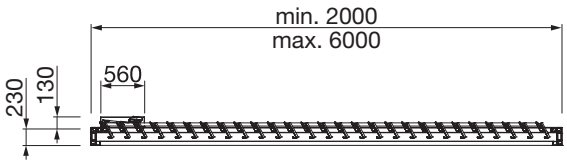

TR4120
Side view

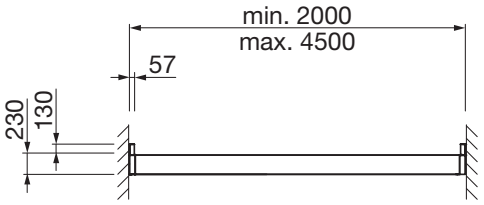

TR4120
Front view

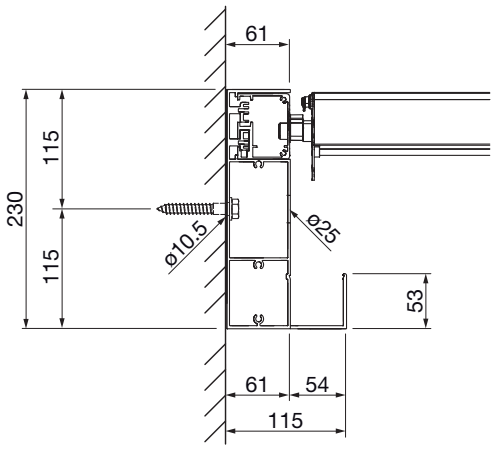

TR4120
Section carrier profile
(soffit mounting)

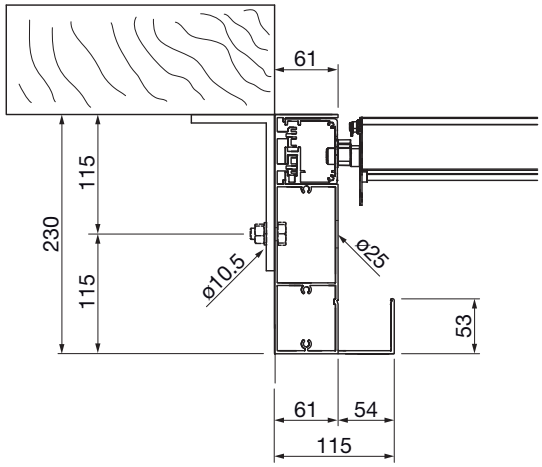

TR4120
Section of support profile
with TP333 Ceiling mounting profile

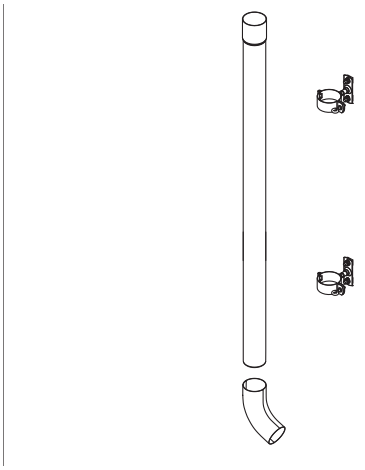

TR4120
Water run-off W1

Digital version – 2026-03 – © STOBAG – Subject to change. Depending on the country or region, the technical details, scope of delivery, guarantee conditions, design and availability may differ from the specifications contained in this document.