ASTANO Hard-Top

Slat roof
TR4520

Product data sheet



Product features

- Roof system with aluminium slats
- Slats rotatable up to 115°
- Integrated water drainage
- Optional integrated lighting

Dimensions

- Width min. 200 cm, max. 600 cm; with 2 roof modules for widths of 450.1 cm or more
- Projection min. 200 cm, max. 600 cm

Installation method and slope

- Installation / reveal, 0° slope

Roof load

- 120 kg/m² for a size of 4 × 6 metres

Wind resistance

- When slats closed, up to 150 km/h; when open, Beaufort 7 (61.5 km/h)

Drive system / control

- Motor drive
- Operation optionally via wired switch, radio remote control, smart-home systems (e. g. KNX, TaHoma)
- Optional automatic system with sun, wind and rain sensor

Frame colours

- STOBAG Classic Colours C10 (RAL 9016), C12 (RAL 9010), C28 (RAL 9006), C30 (RAL 9007), C34 (DB703), C48 (RAL 7022), C50 (RAL 7016), C52 (RAL 9005)
- Optional colours according to the STOBAG LIFESTYLE or RAINBOW colour palette

Lighting

- Optional LED strips with dimmer function in slats and / or on the water channel
- Colour temperature: 3500 K
- Luminous flux: 960 lm

Certificates / Awards

CE
EN 13561

Warranty

- 5 years
  Manufacturer's warranty 2 years, with the option to extend by an additional 3 years

Technical data (dimensions in mm)

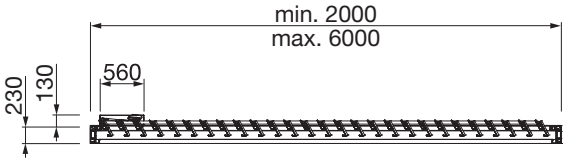

TR4520
Side view

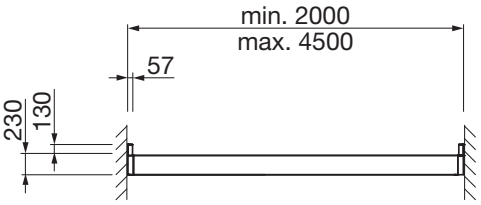

TR4520
Front view
1 Roof module

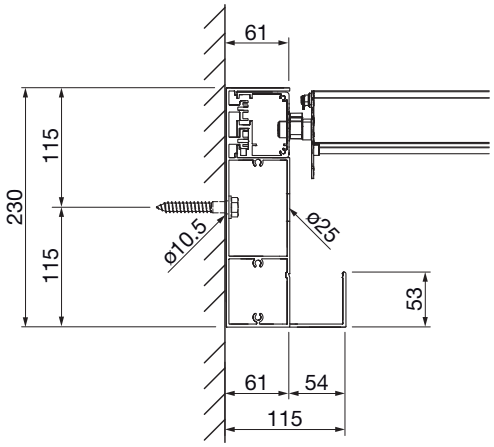

TR4520
Section carrier profile
(soffit mounting)

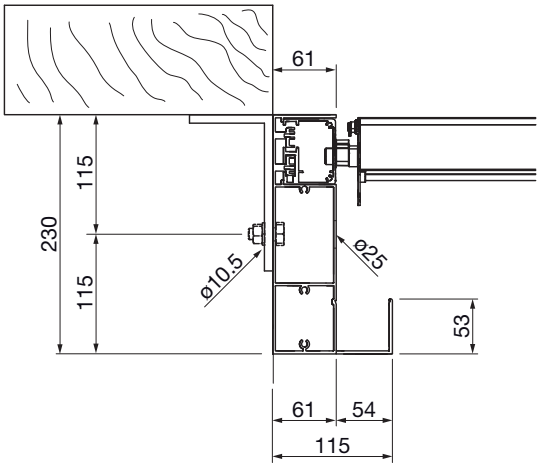

TR4520
Section of support profile
with TP333 Ceiling mounting profile

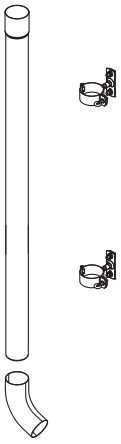

TR4520
Water run-off W1

Digital version – 2026-03 – © STOBAG – Subject to change. Depending on the country or region, the technical details, scope of delivery, guarantee conditions, design and availability may differ from the specifications contained in this document.